NEWTECHWOOD® AMERICA INC.
15912 INTERNATIONAL PLAZA DR.
HOUSTON, TX 77032
TOLL FREE: 1-866-728-5273
PHONE: (281) 570-6450
www.newtechwood.com

☑ SELECT DESIRED COLOR OPTION:

- ☐ BRAZILIAN IPE (IP)
- ☐ HAWAIIAN CHARCOAL (CH)
- ☐ PERUVIAN TEAK (TK)
- ☐ ROMAN ANTIQUE (AT)
- ☐ SPANISH WALNUT (WN)
- ☐ WESTMINSTER GRAY (LG)

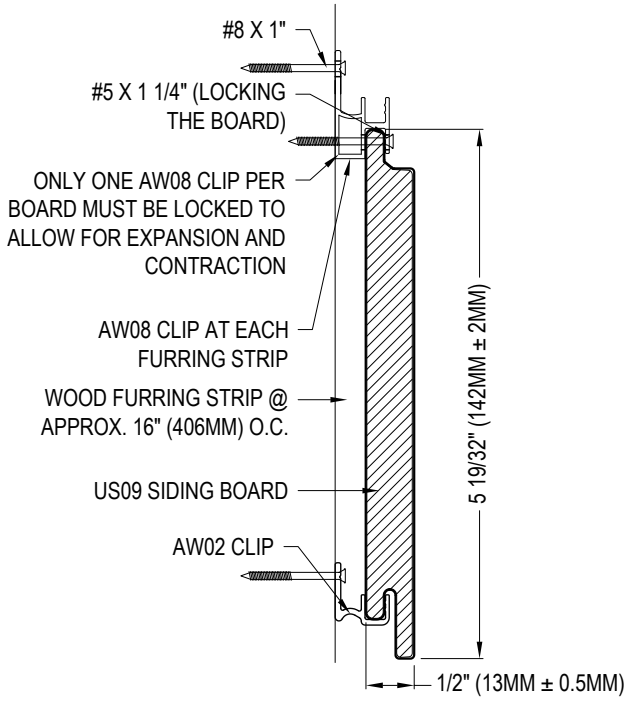

HORIZONTAL INSTALLATION SECTION

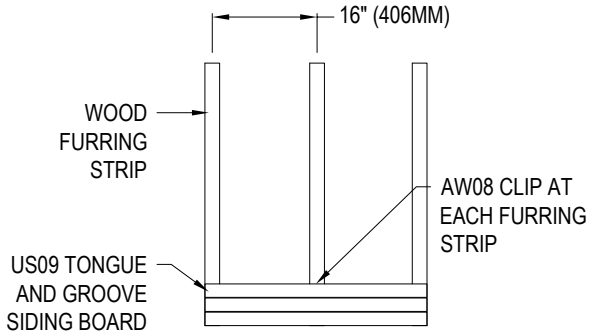

HORIZONTAL INSTALLATION ELEVATION

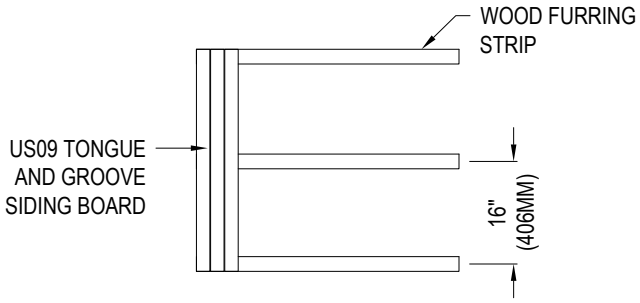

VERTICAL INSTALLATION ELEVATION

SPECIFICATIONS:
PROFILE: TONGUE AND GROOVE SIDING
WEIGHT: 1.32LB/FT
LENGTH: 16'

MANUFACTURERS' NOTES:
1. REFER TO MANUFACTURERS' WEBSITE FOR ALL CUSTOM COLOR OPTIONS

NOTES:
1. INSTALLATION TO BE COMPLETED IN ACCORDANCE WITH MANUFACTURER'S SPECIFICATIONS.
2. DO NOT SCALE DRAWING.
3. THIS DRAWING IS INTENDED FOR USE BY ARCHITECTS, ENGINEERS, CONTRACTORS, CONSULTANTS AND DESIGN PROFESSIONALS FOR PLANNING PURPOSES ONLY. THIS DRAWING MAY NOT BE USED FOR CONSTRUCTION.
4. ALL INFORMATION CONTAINED HEREIN WAS CURRENT AT THE TIME OF DEVELOPMENT BUT MUST BE REVIEWED AND APPROVED BY THE PRODUCT MANUFACTURER TO BE CONSIDERED ACCURATE.
5. CONTRACTOR'S NOTE: FOR PRODUCT AND COMPANY INFORMATION VISIT www.CADdetails.com/info AND ENTER REFERENCE NUMBER 5467-014.

ULTRASHIELD® WALL CLADDING

US09: TONGUE AND GROOVE SIDING BOARD

PROTECTED BY COPYRIGHT ©2022 CADDETAILS.COM LTD.
CADdetails.com